pc-afc

the pacesetter in quality prefab roof products

the pate company
245 eisenhower lane south • lombard, illinois 60148
630.705.1920 • 800.243.3018 • fax 630.705.1930
www.patecurbs.com • e-mail: sales@patecurbs.com

pate
filter curb adapter

standard construction

Heavy ga. galvalume steel, unitized construction with full mitered corners and all seams welded. 1 1/2" duct liner insulation, lined supply. Galvanized base curb has pressure treated 2 x 4 wood nailer strip and insulated solid bottom. All curbs are internally reinforced. Filter adapter has hinged access door with cam lock closures for filter maintenance.
Filters by others.
Foam gasket provided for weatherproofing.

p.o. no. _____
customer _____
_____
project _____
location _____
_____
architect _____
engineer _____

pate adapter

pc-afc

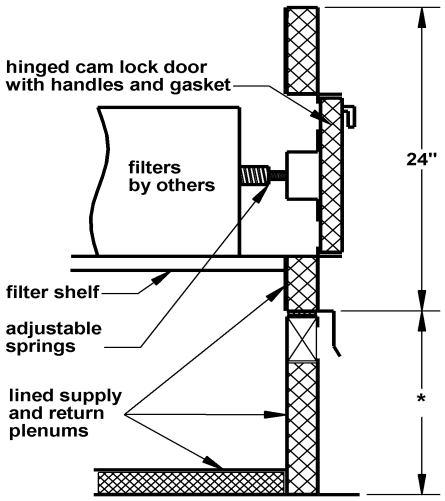

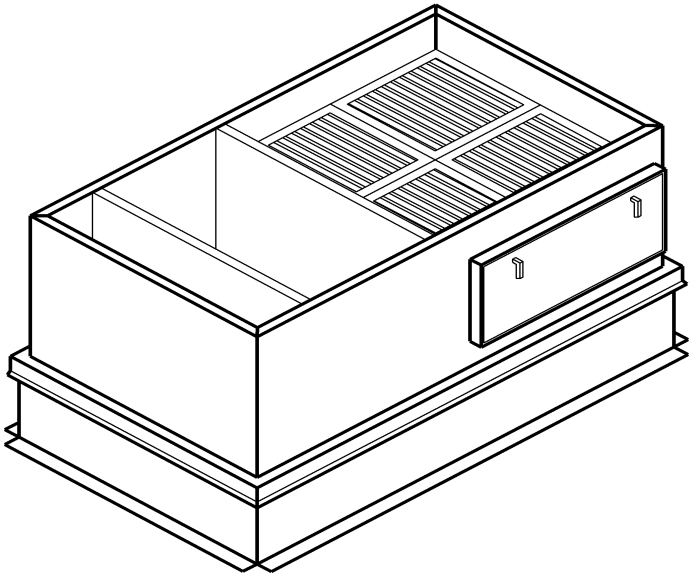

adapter requirements

quantity	base curb style	dimensions O.D.	dimensions I.D.	* base curb height	RTU manufacturer & model	tag

©2006 the pate company