pc-ai

the pacesetter in quality prefab roof products

the pate company
245 eisenhower lane south • lombard, illinois 60148
630.705.1920 • 800.243.3018 • fax 630.705.1930
www.patecurbs.com • e-mail: sales@patecurbs.com

pate
curb adapter increaser

standard construction

Heavy ga. galvalume steel, unitized construction with full mitered corners, all seams welded, optional 1 1/2" thick rigid fiberglass insulation. All adapters reinforced in larger size dimensions. Foam gasket supplied with adapter.

Customer:

PO:

Project:

Address:

Address:

Notes:

pate adapter

pc-ai

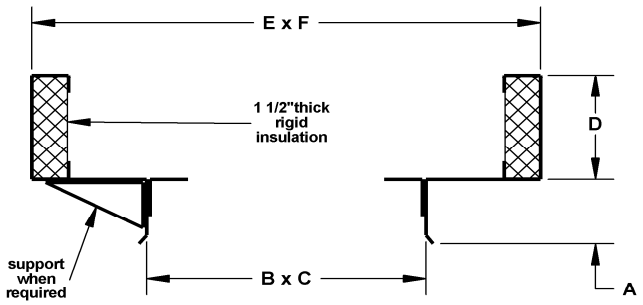

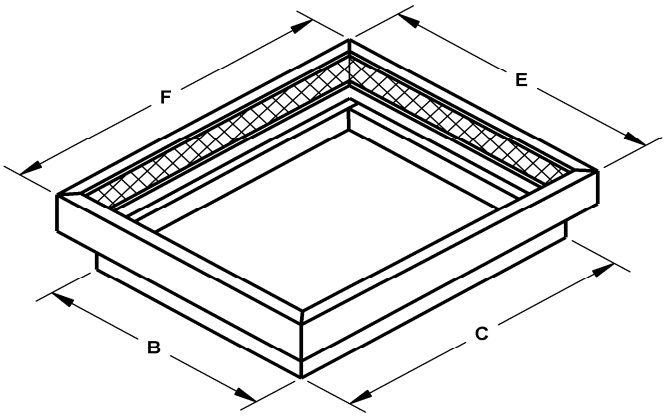

Options: galvanized, aluminum, stainless steel, damper ledge, access door, liners, vents

adapter requirements

quantity	tag	dimensions		A	DHP I.D.	D	options
		B x C	E x F				

©2006 the pate company