es-1

the pacesetter in quality prefab roof products

the pate company
245 eisenhower lane south • lombard, illinois 60148
630.705.1920 • 800.243.3018 • fax 630.705.1930
www.patecurbs.com • e-mail: sales@patecurbs.com

pate equipment supports

standard construction

18 ga. galvanized steel, unitized construction with integral base plate, continuous welded corner seams, pressure treated wood nailer, counterflashing with screws. Internally re-inforced to conform with **pate** load bearing factors.
On **b** style supports, standard wood nailer has 1" overhang unless otherwise specified.

Customer:

PO:

Project:

Address:

Address:

Notes:

pate equipment supports

es-1

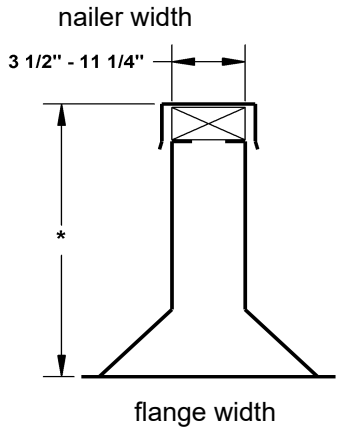

es-1b

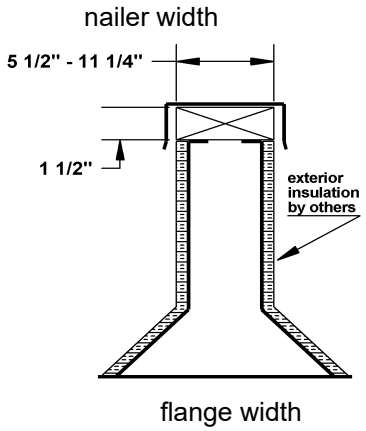

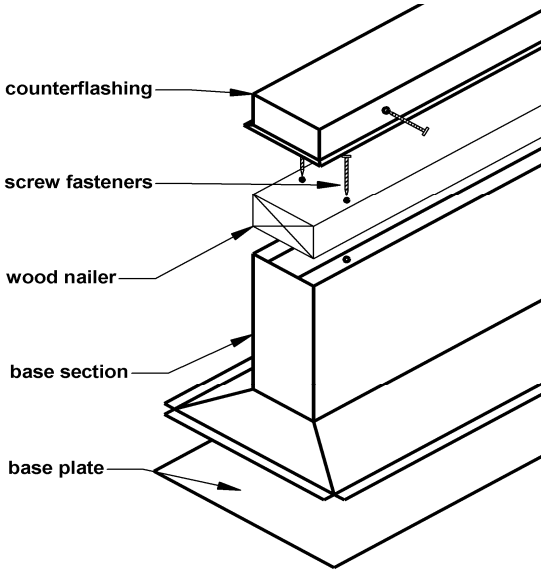

flange length: (es-1: nailer length + 10"); (es-1b: nailer length + 8")

equipment support requirements

quantity	style	nailer size	nailer length	* overall height	overhang **b** style	nailer width	flange width	tag /notes

©2006 the pate company